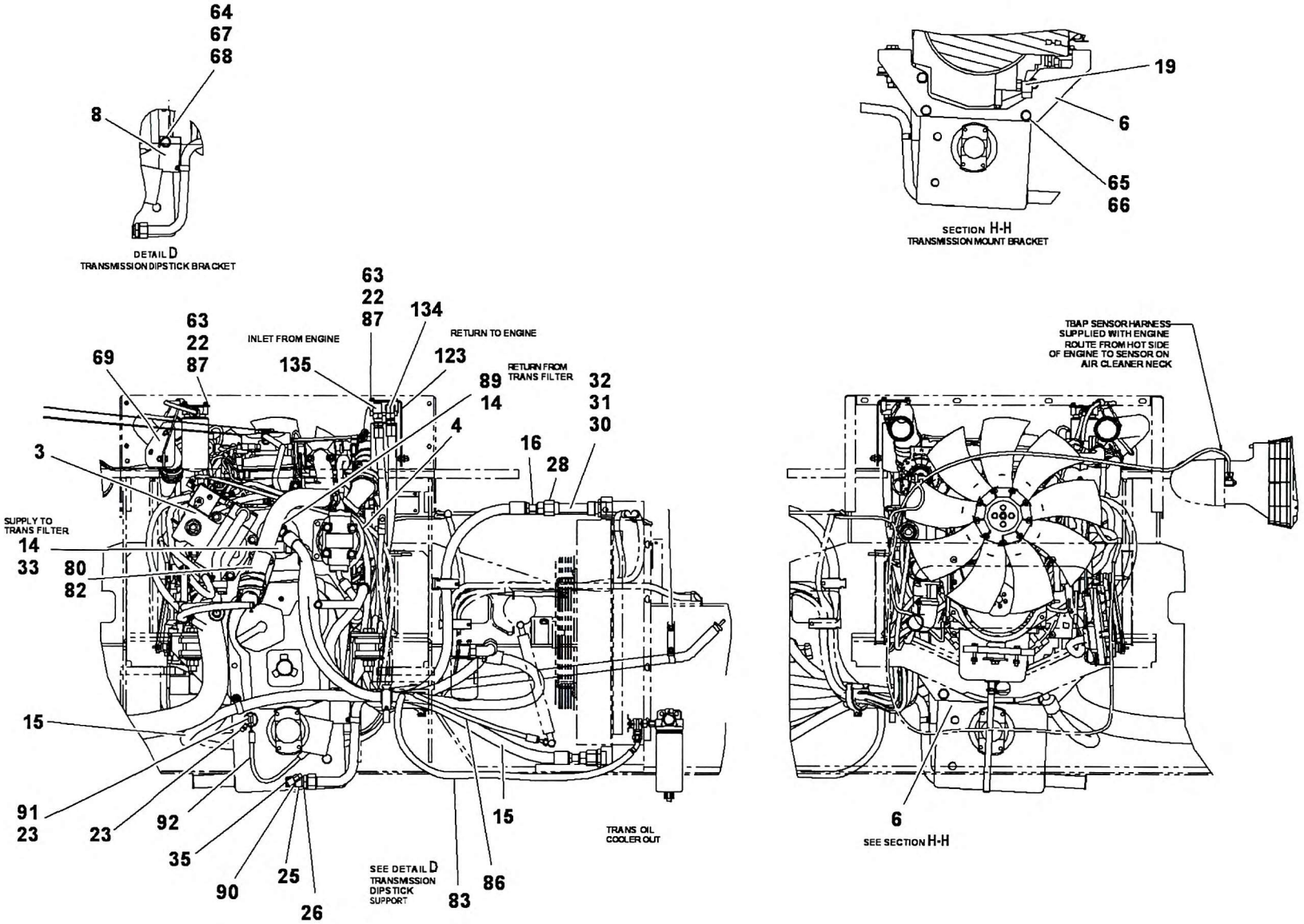
64
67
68
8
DETAIL D
TRANSMISSION DIPSTICK BRACKET
19
6
65
66
SECTION H-H
TRANSMISSION MOUNT BRACKET
63
22
87
134
INLET FROM ENGINE
RETURN TO ENGINE
69
63
22
87
135
123
RETURN FROM
TRANS FILTER
89
14
32
31
30
4
16
28
3
SUPPLY TO
TRANS FILTER
14
33
80
82
15
91
23
23
92
35
90
25
26
SEE DETAIL D
TRANSMISSION
DIPSTICK
SUPPORT
83
86
15
TRANS OIL
COOLER OUT
TBAP SENSOR HARNESS
SUPPLIED WITH ENGINE
ROUTE FROM HOT SIDE
OF ENGINE TO SENSOR ON
AIR CLEANER NECK
6
SEE SECTION H-H

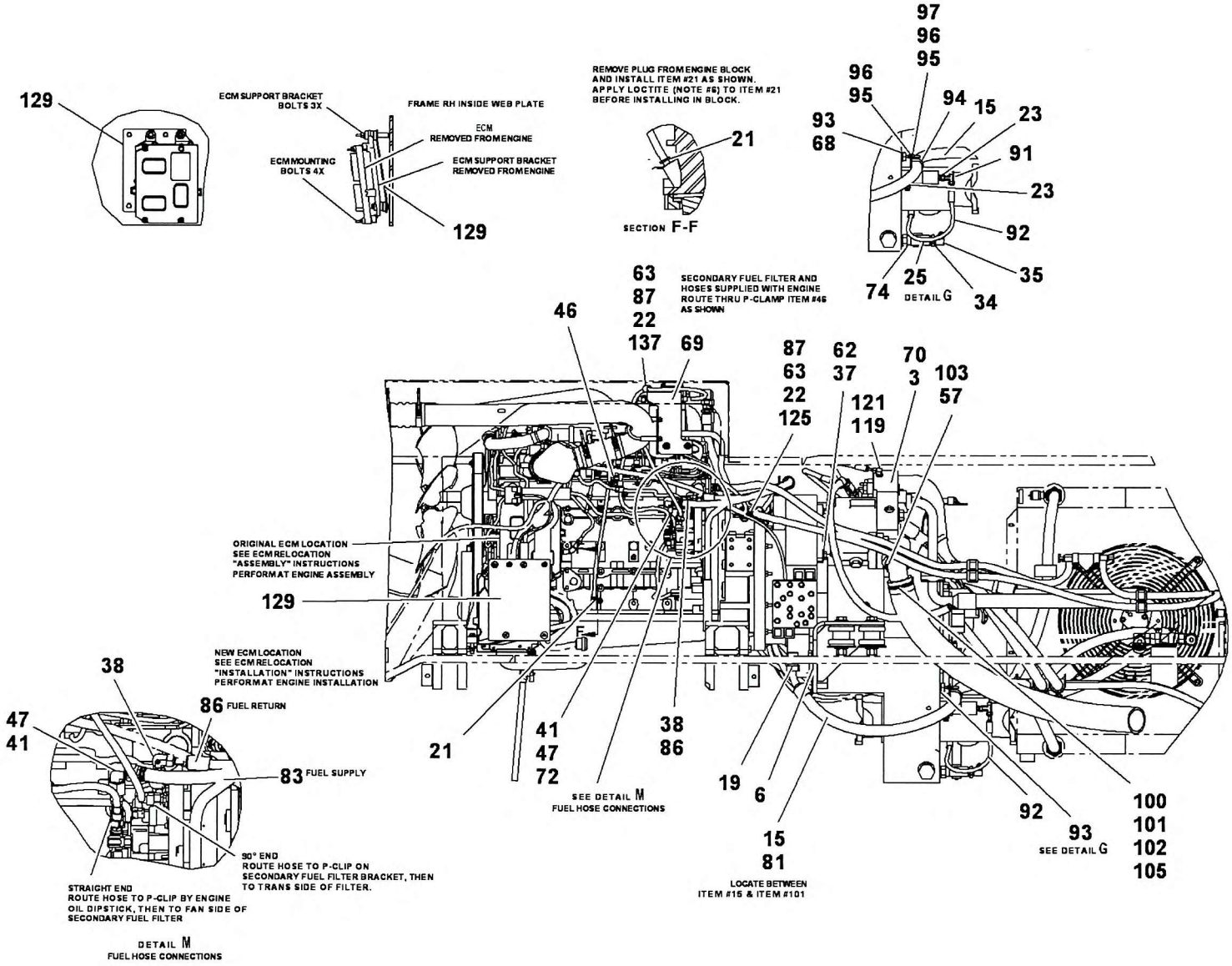
129
ECM SUPPORT BRACKET BOLTS 3X
FRAME RH INSIDE WEB PLATE
ECM REMOVED FROM ENGINE
ECM MOUNTING BOLTS 4X
ECM SUPPORT BRACKET REMOVED FROM ENGINE
129
REMOVE PLUG FROM ENGINE BLOCK AND INSTALL ITEM #21 AS SHOWN. APPLY LOCTITE (NOTE #6) TO ITEM #21 BEFORE INSTALLING IN BLOCK.
21
SECTION F-F
97
96
95
96
95
94
15
23
93
68
91
23
92
35
74
25
34
DETAIL G
63
87
22
137
69
SECONDARY FUEL FILTER AND HOSES SUPPLIED WITH ENGINE ROUTE THRU P-CLAMP ITEM #46 AS SHOWN
46
87
63
22
125
62
37
121
119
70
3
103
57
ORIGINAL ECM LOCATION SEE ECM RELOCATION "ASSEMBLY" INSTRUCTIONS PERFORM AT ENGINE ASSEMBLY
129
NEW ECM LOCATION SEE ECM RELOCATION "INSTALLATION" INSTRUCTIONS PERFORM AT ENGINE INSTALLATION
38
86 FUEL RETURN
47
41
83 FUEL SUPPLY
21
41
47
72
38
86
SEE DETAIL M FUEL HOSE CONNECTIONS
19
6
15
81
LOCATE BETWEEN ITEM #15 & ITEM #101
92
93
SEE DETAIL G
100
101
102
105
90° END ROUTE HOSE TO P-CLIP ON SECONDARY FUEL FILTER BRACKET, THEN TO TRANS SIDE OF FILTER.
STRAIGHT END ROUTE HOSE TO P-CLIP BY ENGINE OIL DIPSTICK, THEN TO FAN SIDE OF SECONDARY FUEL FILTER
DETAIL M
FUEL HOSE CONNECTIONS

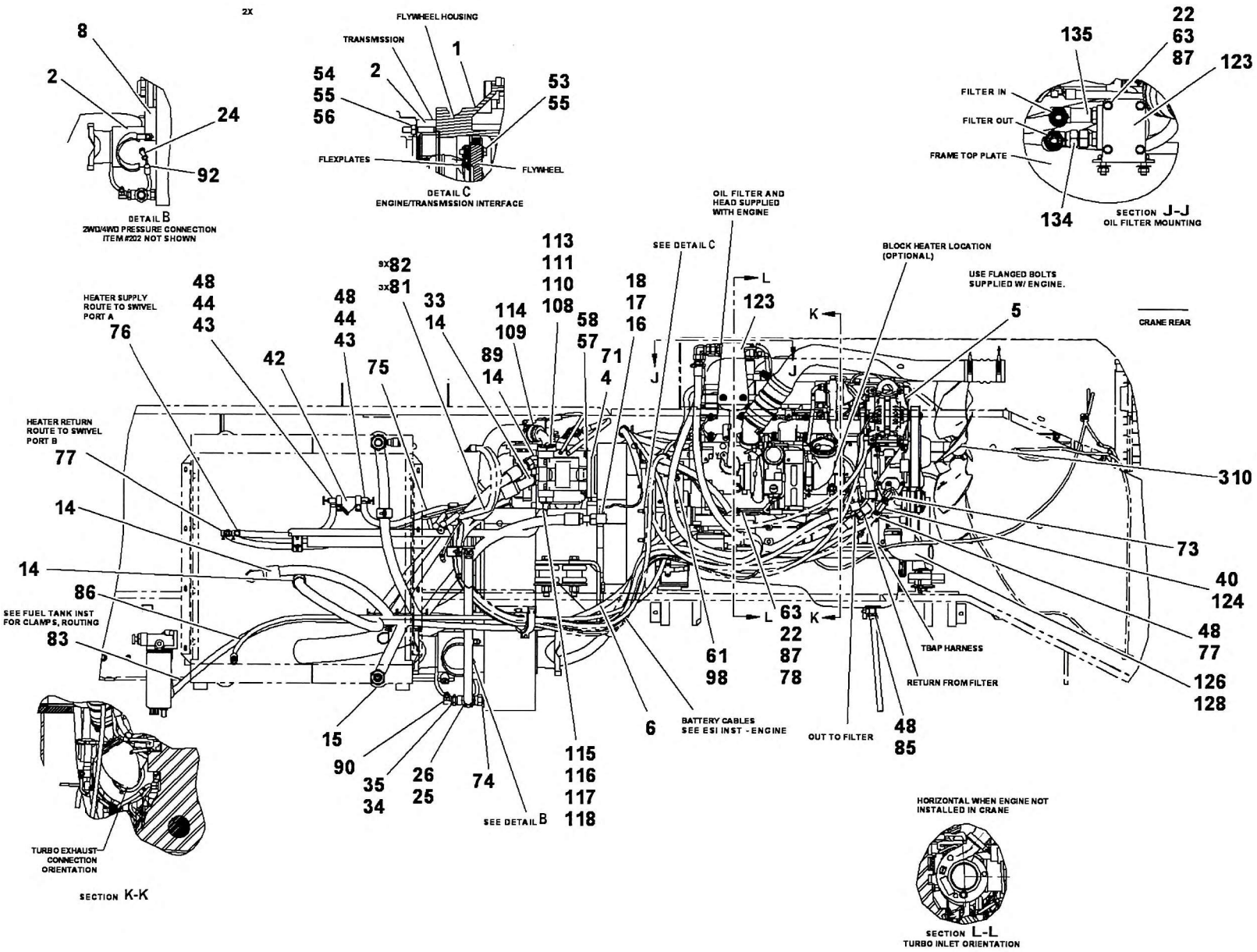
DETAIL B
2WD/4WD PRESSURE CONNECTION
ITEM #202 NOT SHOWN
DETAIL C
ENGINE/TRANSMISSION INTERFACE
FLYWHEEL HOUSING
TRANSMISSION
FLEXPLATES
FLYWHEEL
SECTION J-J
OIL FILTER MOUNTING
FILTER IN
FILTER OUT
FRAME TOP PLATE
OIL FILTER AND HEAD SUPPLIED WITH ENGINE
SEE DETAIL C
BLOCK HEATER LOCATION (OPTIONAL)
USE FLANGED BOLTS SUPPLIED W/ ENGINE.
CRANE REAR
HEATER SUPPLY ROUTE TO SWIVEL PORT A
HEATER RETURN ROUTE TO SWIVEL PORT B
SEE FUEL TANK INST FOR CLAMPS, ROUTING
TBAP HARNESS
RETURN FROM FILTER
BATTERY CABLES SEE ESI INST - ENGINE
OUT TO FILTER
SEE DETAIL B
TURBO EXHAUST CONNECTION ORIENTATION
SECTION K-K
HORIZONTAL WHEN ENGINE NOT INSTALLED IN CRANE
SECTION L-L
TURBO INLET ORIENTATION

(SHEET 2 OF 4)

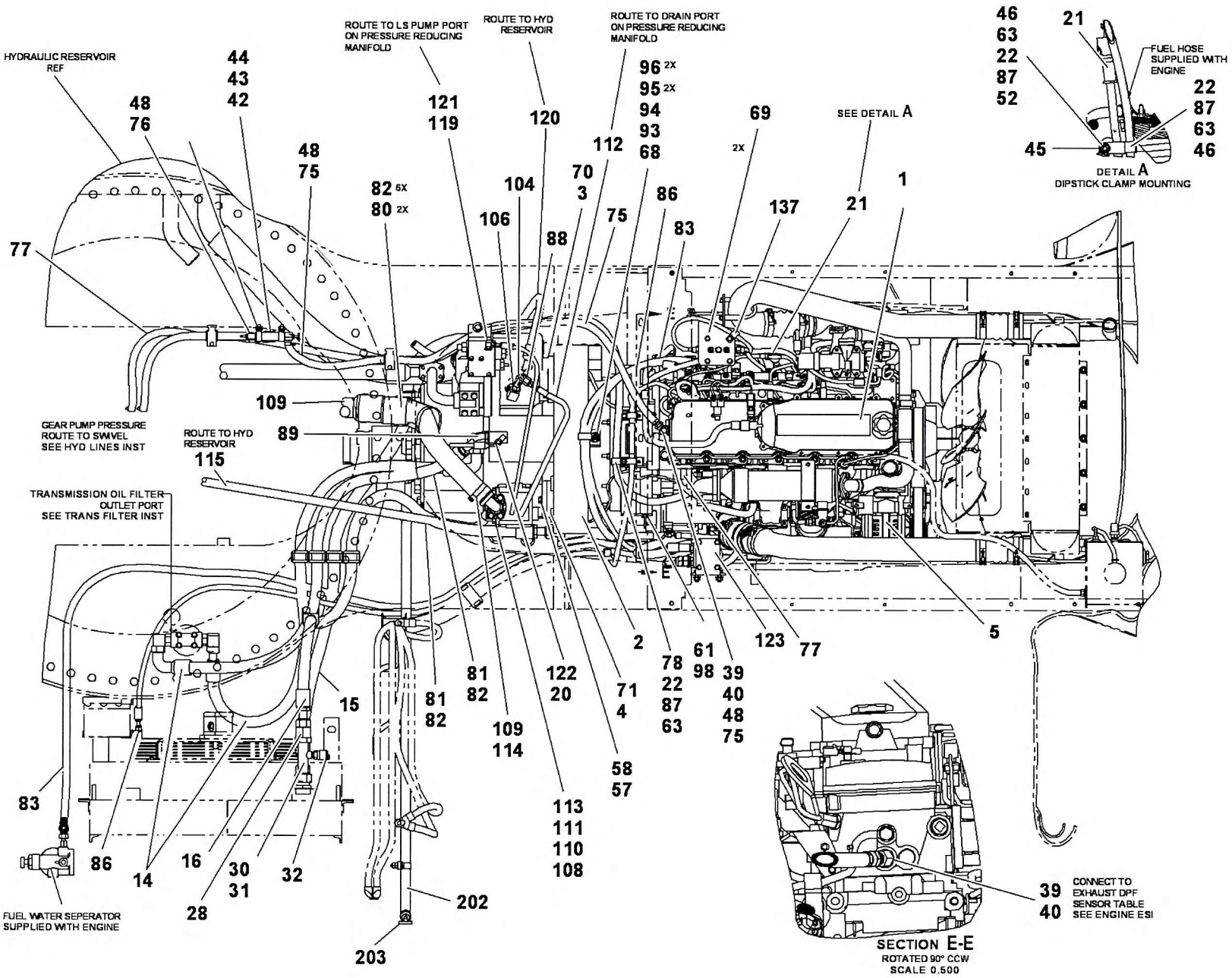
HYDRAULIC RESERVOIR REF
ROUTE TO LS PUMP PORT ON PRESSURE REDUCING MANIFOLD
ROUTE TO HYD RESERVOIR
ROUTE TO DRAIN PORT ON PRESSURE REDUCING MANIFOLD
SEE DETAIL A
FUEL HOSE SUPPLIED WITH ENGINE
DETAIL A
DIPSTICK CLAMP MOUNTING
GEAR PUMP PRESSURE ROUTE TO SWIVEL SEE HYD LINES INST
ROUTE TO HYD RESERVOIR
TRANSMISSION OIL FILTER OUTLET PORT SEE TRANS FILTER INST
FUEL WATER SEPERATOR SUPPLIED WITH ENGINE
CONNECT TO EXHAUST DPF SENSOR TABLE SEE ENGINE ESI
SECTION E-E
ROTATED 90° CCW
SCALE 0.500

(SHEET 1 OF 4)